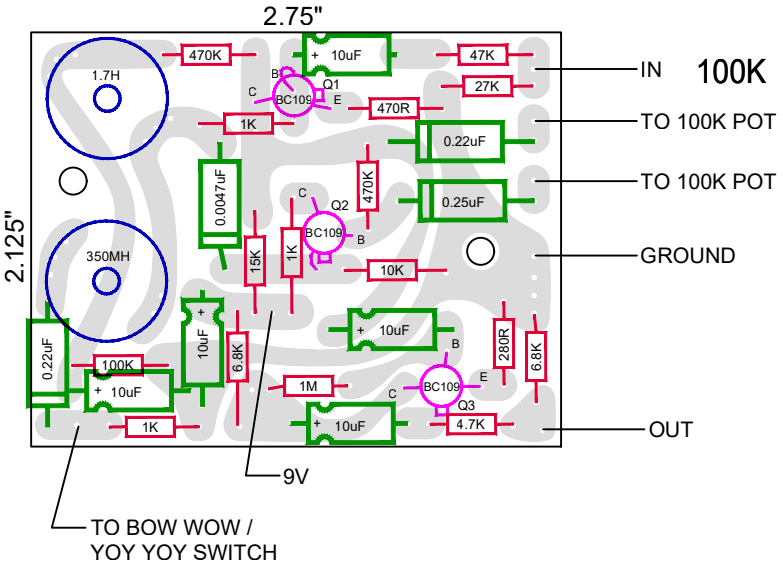

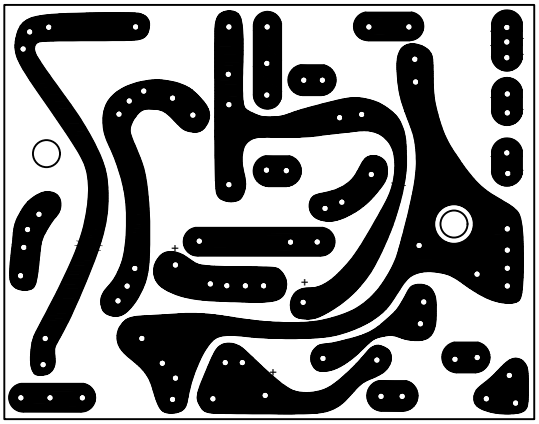

1ST PATTERN SCHALLER "BOW WOW YOY YOY"
PCB LAYOUT BY PAUL MAROSSY 2/7/18